268AB

Lead Free Solder Gate Valve

Feature

200# WOG
Lead free brass body
Solder x Solder
Solder ends (ASME B16.22)
Screw in bonnet
Non-rising stem
Solid disc
AB1953, NSF/ANSI 61 & 372 certified



Pressure/ Temperature rating	
200# WOG	max. at 212 °F

Material

	Part	Material	Specification
1	Body	Lead Free Brass	ASTM B927 C28500
2	Bonnet	Lead Free Brass	ASTM B927 C28500
3	Stem	Lead Free Brass	ASTM B927 C28500
4	Disc	Lead Free Brass	ASTM B927 C28500
5	Lock nut	Lead Free Brass	ASTM B927 C28500
6	Grand nut	Brass	ASTM B124
7	Gland	Brass	ASTM B124
8	Packing	PTFE	-
9	Handwheel	Aluminum	-
10	Nut	Steel	A36
11	Tag	Aluminum	-
12	Gasket	PTFE	-

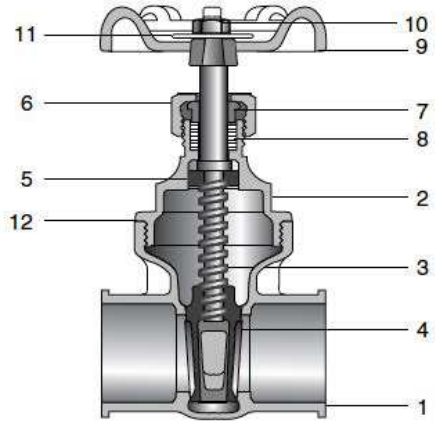

Dimension, Weight

Size	Φ [in]	D [in]	H [in]	L [in]	Wt. [lb]
½"	0.627-0.631	1.78	2.75	1.60	0.36
¾"	0.877-0.881	1.78	3.18	2.00	0.56
1"	1.128-1.131	2.05	3.50	2.28	0.74
1¼"	1.378-1.381	2.38	4.35	2.91	1.36
1½"	1.628-1.632	2.38	4.75	3.18	1.64
2"	2.128-2.132	3.12	5.60	3.62	2.52

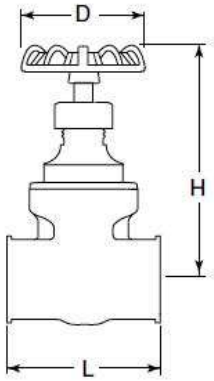

WARNING:Thisproductcanexposeyoutochemicalsincludinglead,whichisknowntotheStateofCaliforniato causecancerandbirthdefectsorotherreproductiveharm.Formoreinformationgotowww.P65Warnings.ca.gov.

Drawings, photos and data are provided for information only and subject to change without notice. No part of this document may be reproduced, copied, modified or adapted, without the prior written consent of the copyright owner, unless otherwise indicated.
The Drinking Water Act has defined lead free as having the average wetted surface ratio of the fixture to contain less than .25% of lead per volume.
© 2020 Red-White Valve Corp. All Rights Reserved